DAILY 4X4

Single & Crew Cab

4 ALL TRACKS ALL CONDITIONS

Overseas Model Shown

ENGINE	TRANSMISSION	MASS RATINGS	WHEELBASE
Power: 132kW @3500prm Torque: 430 Nm @1500rpm	ZF 8 speed Hi-Matic automatic	GVM: 7200kg (remains 7000kg on 4175mm wheelbase) GCM: 10500kg	3480mm 3780mm 4175mm

KEY FEATURES

- Powerful yet efficient advanced 3.0 litre turbo diesel engine
- Low emission levels – engine meets stringent Euro 6 standards
- Standard market-leading 8 speed full automatic transmission
- Ventilated disc brakes with ABS and ESP 9
- Ergonomically-designed cabin based on the award-winning 4x2 Daily range
- New C-Section Chassis
- Auto HVAC climate control system

For available options & details see the next pages.

WARRANTY

Standard Warranty
3 years /100,000 km (whichever occurs first)

IVECO
Drive the road of change

ENGINE

Engine Model	F1C Euro 6 Step-E, 3.0L with variable geometry turbine (VGT), EGR & SCR
Total Displacement	2998cm³
Maximum Power	180HP @3500prm
Maximum Torque	430 Nm @1500rpm

F1C EURO 6 180 HP

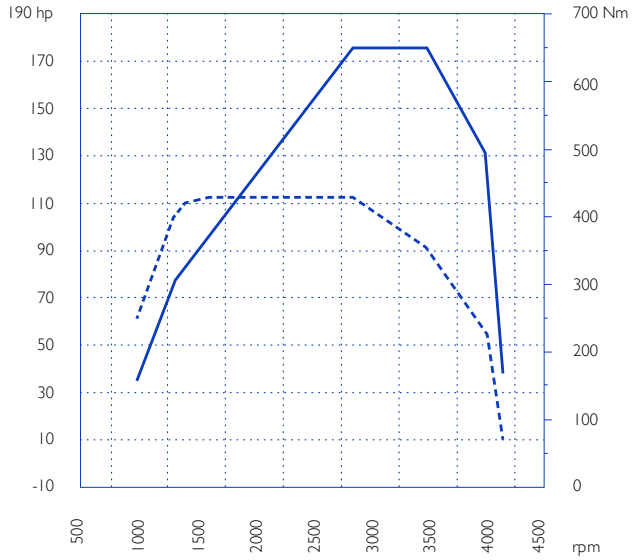

Number of cylinders	4 (16 valves) in line
Fuel Injection system	Electronically controlled direct injection, common rail & high pressure pump
Bore x Stroke	95.8 mm x 104 mm

TRANSMISSION

Description	ZF 8 speed Hi-Matic automatic	
Gear ratios: ZF 8 speed Hi-Matic automatic	1st: 4.696	5th: 1.285
	2nd: 3.130	6th: 1.000
	3rd: 2.104	7th: 0.839
	4th: 1.667	8th: 0.667
	Rev: 3.297	

TRANSFER BOX

All Wheel Drive: Permanent Torque Distribution (%): Front - 50, Rear - 50	Model TC400
	Low Ratio: 2:13
	Normal Ratio: 0.975

POWER TAKE-OFF

Power Take-off	Optional

- It is possible to manage independently from the axles motion the activation of the PTO.
- The PTO can work also with the vehicle in motion.
- There is a specific switch on the base of the driver seat that manages the motion transmission to the axles.

STEERING

Hydraulic Power Steering	Equipped

WHEELS & TYRES

Wheel and tyre type	265/70R19.5 OFF-R Pirelli

FUEL & ADBLUE® TANK

Fuel Tank	90L
AdBlue® Tank	24L
Optional	110 L Fuel Tank (No spare wheel mount on side of chassis)

FUEL SAVING FEATURES

EcoSwitch	Equipped

EXPANSION MODULE WITH CAN OPEN INTERFACE

	Equipped - Lights control - Run lock function - Alarm function - Body Builder CAN interface - Advanced PTO controls

SUSPENSION

Front suspension	Independent Front Suspension
Rear suspension	Parabolic Rear Suspension 3 leaf

FRAME

Type	C-Section, 184 mm (height), 69 mm (width), 5 mm (thickness)

BRAKING SYSTEM

Type/Control	ESP 9:
	- ABS (Antilock Braking System)
	- ASR (Anti Slip Regulator)
	- EBD (Electronic Brake force Distribution)
	- ESP (Electronic Stability Program)
	- HFC (Hydraulic Fading Compensation)
	- HHC (Hill Hold Control)
	- HRB (Hydraulic Rear Wheel Boost)
	- LAC (Adaptive Load Control)
	- RMI (Roll Movement Intervention)
	- ROM (Roll Over Mitigation)
	- TSM (Trailer Sway Mitigation)
Front: Diameter/ Thickness	Ventilated disc/301 x 30 mm
Rear: Diameter/ Thickness	Ventilated disc/306 x 28 mm
Parking Brake	Manual brake operating on rear axle

ELECTRICAL & ELECTRONICS

Battery	12 Volt–110 Ah
Alternator	12 Volt–180 A, Battery cut-off switch (in-dash)

SAFETY FEATURES

Cruise control	Equipped
Reverse buzzer	Equipped
Engine fan deactivation system	Equipped
Driver and passenger airbags	Equipped
Daytime running lights (DRL)	Equipped
Halogen headlights	Equipped
Fog lights	Equipped
Engine immobiliser	Equipped
Central locking with remote control & door locking management	Equipped
Steering lock	Equipped

CAB EXTERIOR

Front grille	Chrome
	Oil sump guard protection

CAB INTERIOR

Fully digital instrument cluster	Equipped
	- Trip computer
	- Speedometer
	- Tachometer
	- Fuel level indicator
	- Coolant temperature gauge
	- 10-inch high resolution TFT colour display
	- TFT Display Panel includes: digital speedometer, oil, battery and service information
	- Navigation and phone multimedia, fuel economy, trip computer, vehicle settings, display settings and diagnostics
	- Engine oil level display
In cab handles LHS and RHS for cab access	Equipped
Upper shelf storage compartment	Equipped
10-inch Multimedia + Navigation	Apple CarPlay®, Android Auto® and DAB+ radio
Differential lock control x 3 (Front, centre and rear)	Equipped
Dash mounted gear lever	Equipped
Fabric interior trim (2 tone)	Equipped
Driver seat*	Heated, suspended & adjustable w/ lumbar adjustment & armrest
Passenger seat*	2 person bench seat with 3-point seatbelts and extractable table (single cab)
	Single passenger seat, heated, suspended and adjustable w/ lumbar adjustment and armrest (crew cab)
*Both seats include new Hi-Adaptive memory foam technology	
Cab rear window	Equipped
Single zone automatic climate control	Equipped
Leather steering wheel	Equipped
Padded headrests	Equipped
Electric windows	Equipped
Steering wheel controls	Equipped
Heated electric adjustable mirrors	Equipped
Underseat storage	Equipped
Beverage holders: 2 x cup, 2 x bottle	Equipped

Overseas Model Shown

Overseas Model Shown

Overseas Model Shown

Rear view

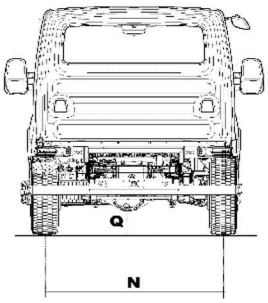

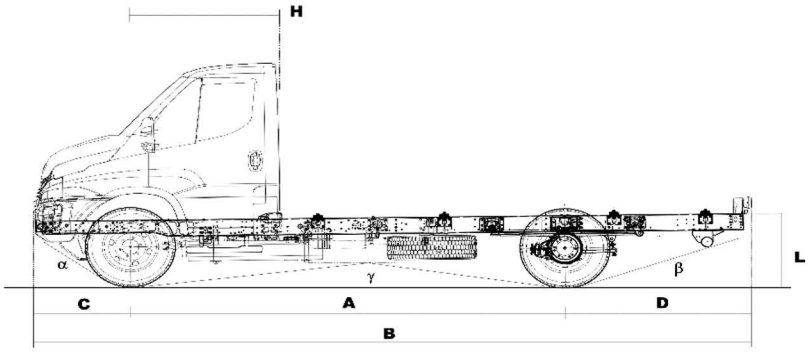

Front view

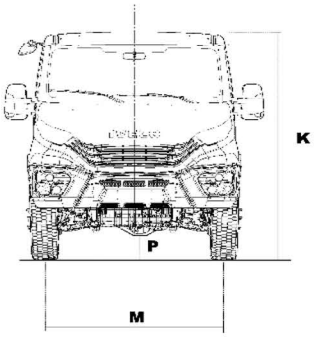

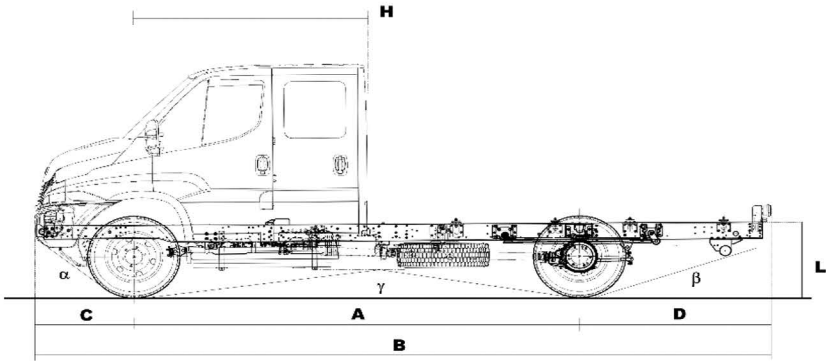

DIMENSIONS

	SINGLE CAB			CREW CAB		
Wheelbase (A)	**3480mm**	**3780mm**	**4175mm**	**3480mm**	**3780mm**	**4175mm**
Overall length (dependant on wheelbase) (B)	5348mm	5853mm	6818mm	5348mm	5853mm	6818mm
Front overhang (C)	928mm	928mm	928mm	928mm	928mm	928mm
Rear overhang (D)	940mm	1145mm	1715mm	940mm	1145mm	1715mm
Front axle to front of body (H)	1430mm	1430mm	1430mm	2181mm	2181mm	2181mm
Overall height (unladen) (K)	2508mm	2506mm	2501mm	2499mm	2496mm	2492mm
Frame height at end of frame - unladen (L)	872mm	872mm	882mm	869mm	870mm	882mm
Front track (M)	1725mm	1725mm	1725mm	1725mm	1725mm	1725mm
Rear track (N)	1713mm	1713mm	1713mm	1713mm	1713mm	1713mm
Front ground clearance (P)	263mm	263mm	263mm	263mm	263mm	263mm
Rear ground clearance (Q)	225mm	225mm	225mm	225mm	225mm	225mm
Approach angle (a)	35°	35°	35°	35°	35°	35°
Departure angle (b)	33°	29°	17°	33°	29°	17°
Ramp angle (y)	157°	158°	155°	157°	158°	155°

DIMENSIONS & WEIGHTS

	SINGLE CAB			CREW CAB		
Wading Depth	640mm	640mm	640mm	640mm	640mm	640mm
Unladen frame height at front axle	780mm	781mm	778mm	768mm	769mm	766mm
Unladen frame height at rear axle	853mm	851mm	852mm	848mm	846mm	848mm
Turning circle: kerb to kerb	14100mm	14900mm	16100mm	14100mm	14900mm	16100mm
Overall width	2056mm	2056mm	2056mm	2057mm	2057mm	2057mm
GVM	7200kg	7200kg	7000kg	7200kg	7200kg	7000kg
GCM	10500kg	10500kg	10500kg	10500kg	10500kg	10500kg
Towing capacity (braked)	3500kg	3500kg	3500kg	3500kg	3500kg	3500kg
Front axle capacity	2700kg	2700kg	2700kg	2700kg	2700kg	2700kg
Rear axle capacity	5000kg	5000kg	5000kg	5000kg	5000kg	5000kg
Kerb mass front axle	1935kg	1898kg	1950kg	2150kg	2125kg	2190kg
Kerb mass rear axle	1033kg	1080kg	1050kg	1183kg	1218kg	1175kg
Kerb mass total	2968kg	2978kg	3000kg	3333kg	3343kg	3365kg
Payload capacity	4232kg	4222kg	4000kg	3867kg	3857kg	3635kg

Weights are standard configuration and include: chassis cab, driver (75kg), full fuel tanks, oils, tools kit and spare wheel (when present).

OPTIONS

110L fuel tank
Transfer box PTO (ISO 4 bolts Pump connection)
Passenger seat: Heated, suspended & adjustable w/ lumbar adjustment & armrest (Single Cab only as standard on Crew Cab)

DISCLAIMER:
IVECO TRUCKS AUSTRALIA PTY LTD. ABN 86 004 065 061 ("IVECO") DISTRIBUTES IVECO TRUCKS IN AUSTRALIA AND NEW ZEALAND. THE INFORMATION AND IMAGES IN THIS DOCUMENT ARE PROVIDED AS A GUIDE ONLY. IVECO RESERVES THE RIGHT TO MAKE CHANGES AT ANY TIME WITHOUT NOTICE TO THE INFORMATION CONTAINED IN THIS DOCUMENT FOR ANY COMMERCIAL REASONS. ALWAYS CONSULT YOUR AUTHORISED IVECO DEALER TO ENSURE THE SPECIFICATIONS, EQUIPMENT, OPTIONS, AND DESIGN FEATURES INCLUDING COLOUR, ARE AVAILABLE FOR THE VEHICLE BEFORE DECIDING TO PLACE AN ORDER, SOME OPTIONS MAY ONLY BE AVAILABLE IN COMBINATION WITH OTHERS. OVERSEAS IMAGES ARE SHOWN THROUGHOUT THIS DOCUMENT AND THE IMAGES MAY INCLUDE EQUIPMENT WHICH IS NOT OPTIONAL. TO THE EXTENT PERMITTED BY LAW TO DO SO, IVECO SHALL NOT BE LIABLE TO ANY PERSON BECAUSE OF RELIANCE ON THE CONTENT CONTAINED IN THIS DOCUMENT. 08/2026